RS485 Soil Sensor Testbench Usage

Testbench Hardware Configuration

The testbench is located in the DFRobot box in the science table. The wiring setup detailed in the image below, however, the system should already be wired accordingly.

- The red MCU should have two wires connected to it: a red wire connected to VCC, and a blue wire connected to ground. These should both be connected to the breadboard.
- The blue CH340 USB Transceiver should have three wires connected between it and the breadboard.

If these wires have disconnected, please see the wire connection details below.
As such, there are only two steps required to connect the testbench to a computer:

1. Connect a USB-C Cable from the red MCU to a computer or power source
2. Plug the CH340 USB Transceiver into an available USB port on your computer

The following image details the testbench.

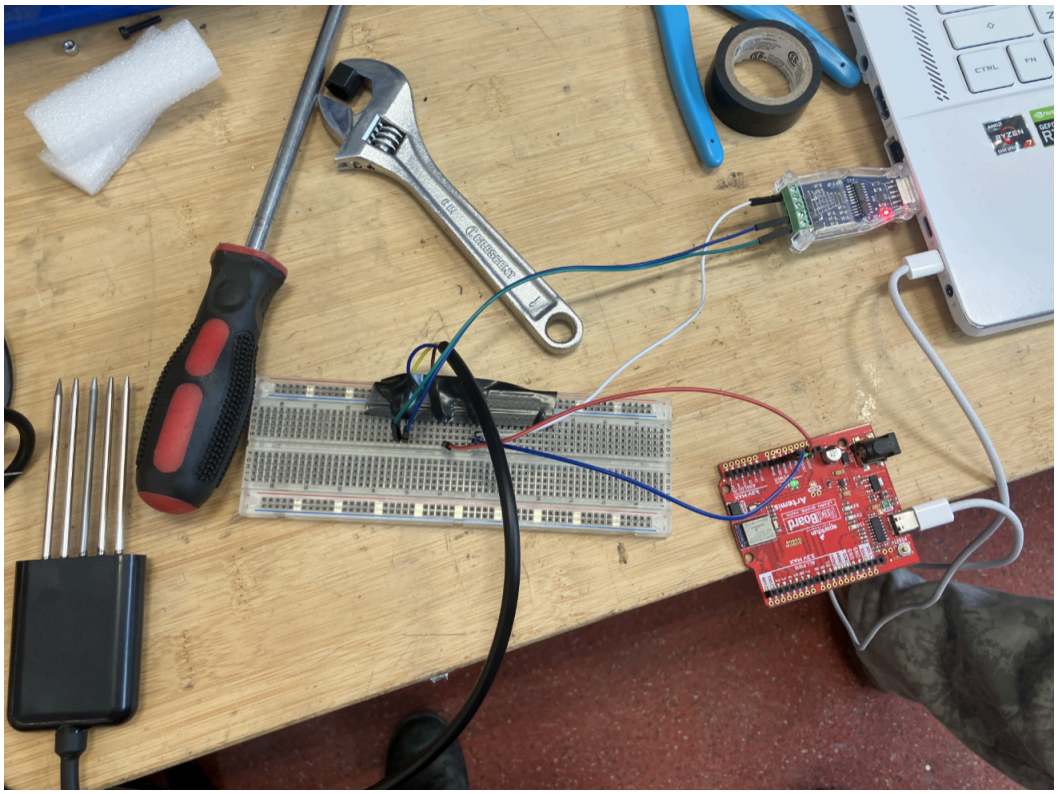

In the event of a wire disconnection, the following instructions can be used to correctly fix the testbench. For any inquiries or support, contact software. The following is a schematic diagram of the setup.

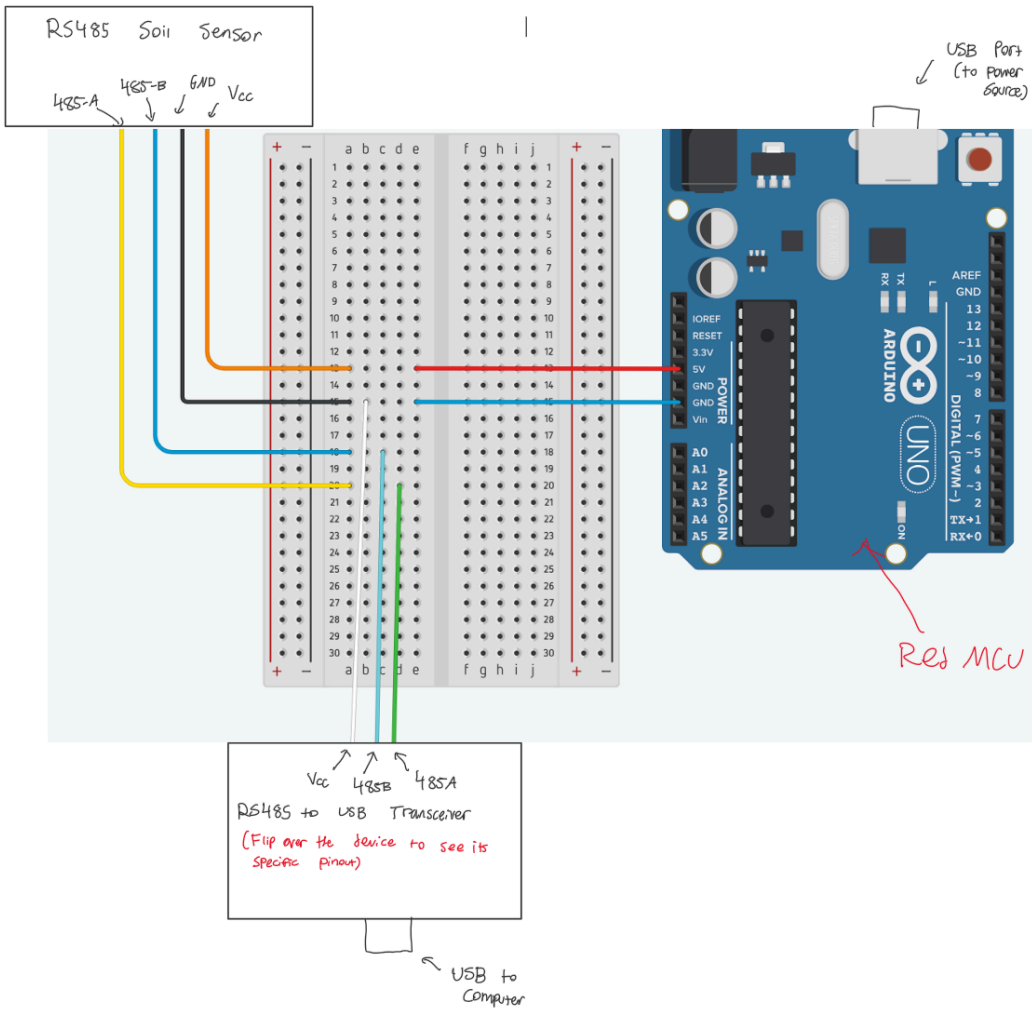

Steps:

1. Connect the 5V and GND pins from the MCU to the power rails of the breadboard.
2. Connect the Red MCU to your laptop or another suitable power source using a USB cable.
3. Connect the RS485 Soil Sensor
4. Using the sensor documentation located on the label of the sensor as a reference, connect…
    - 5V from the breadboard to the sensor VCC.
    - GND from the breadboard to the sensor GND
    - RS485 A and B lines according to the wiring instructions
5. Connect GND on the CH340 USB Transceiver (Labelled as “RS485 to USB Transceiver” in the diagram) to GND on the breadboard.
6. Connect the A and B lines from the breadboard to the CH340 USB Transceiver. The bottom of the CH340 transceiver contains these respective pinouts
7. Connect GND on the CH340 Transceiver to GND on the breadboard.

8. Plug the CH340 transceiver into your personal computer.

<u>Testbench Software Configuration</u>

Required Installations

1. Python (if it not already installed): https://www.python.org/downloads/
    - If python needs to be installed, the latest version (3.14.3) should suffice
2. A code editor, such as Visual Studio Code: https://code.visualstudio.com/

To utilize the testbench, the COM port of the CH340 Transceiver must be configured. The steps to do this for Windows are detailed below. If you are using a Mac, contact software.

1. Plug the CH340 Transceiver into your computer
2. In the Windows search bar, search for and open "Device Manager"
3. In Device Manager, open the tab which says "Ports (COM & LPT)" and look for any devices which have "CH340" in their name.
4. Make note of the COM port listed in brackets beside the device name.

The provided example does not have a CH340 device connected, however, if the device were connected, it would be seen in this window.

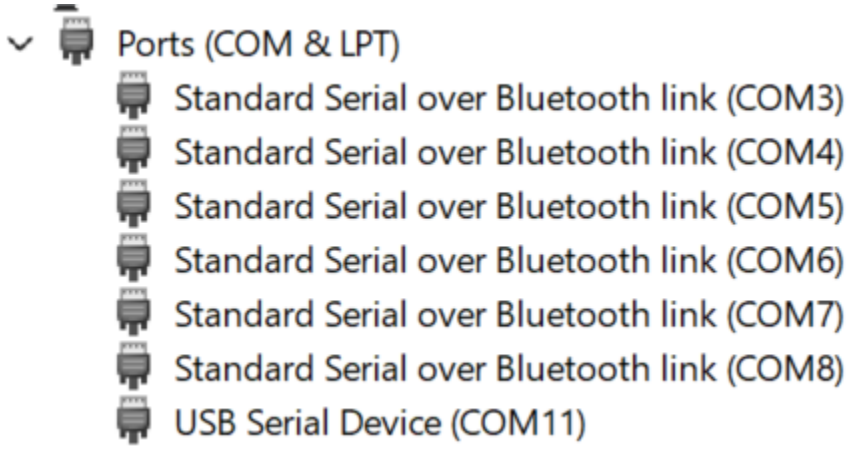

5. Right click science_testbench.py and open it with a text editor such as VSCode
6. **Change the COM port on line 31 to be the COM port you previously identified in Device Manager.** This step must be done for the program to launch!

```
29  """
30
31  PORT = "COM5"  # Change this to your COM port
32
33  """
```

Launching the Testbench

To launch the testbench, double click **run.bat** in the science_testbench_release folder.

- run.bat must be in the same directory as science_testbench.py
- run.bat will configure the environment necessary for the testbench to work. As such, it is crucial that this file is executed, and not science_testbench.py.

Testbench Configuration

If there is code to be edited, all editing will be done in **science_testbench.py**. Right click this file to open it in a text editor.

Displaying Instantaneous Values or Moving Averages

Uncomment **line 288** to view the **instantaneous values** in the terminal.

```
278        """
279
280        Uncomment this line to view instantaneous values
281
282
283        """
284        # print("Temperature: " + str(temp_val) + " | Humidity: " + str(hum_val) + " | pH: " + str(ec_val) + " |
```

Uncomment **line 310** to view the **moving averages** in the terminal.

```
300        """
301
302        Uncomment this line to view moving averages
303
304        """
305
306        print("Temperature: " + str(avg_temp) + " | Humidity: " + str(avg_hum) + " | pH: " + str(avg_ph) + " | E
```

By default, the program will display the moving averages of all four parameters in the terminal. Only one of these lines should be uncommented at a time for clarity.

The number of data points used in a moving average is defaulted to 20, and can be changed on line 38

```
33   """
34
35   The number of moving average points can be changed here
36
37   """
38   MOVING_AVERAGE_POINTS = 20
```

All .csv outputs use instantaneous values, not moving average values.

Offset and Scaling Configurations

Offsets can be specified prior to runtime by editing the offset and scaling parameters of each measured quantity, on lines 45-53.

```
41  """
42  Change Offset and Scaling parameters here
43  """
44
45  TEMP_OFFSET_BASE = 0
46  HUMIDITY_OFFSET_BASE = 0
47  PH_OFFSET_BASE = 0
48  EC_OFFSET_BASE = 0
49
50  TEMP_SCALING_BASE = 1
51  HUMIDITY_SCALING_BASE = 1
52  PH_SCALING_BASE = 1
53  EC_SCALING_BASE = 1
```

Alternatively, a one-time offset and scaling for each measured quantity can also be set by pressing and holding the following buttons while the program is running.

- Press and hold ‘o’ to change offsets
- Press and hold ‘s’ to change scaling

If edits are made while the program is running, they will not be reflected on subsequent executions. As such, to have a set offset or scaling for multiple executions, the base offset parameters detailed in the image above must be changed.

CSV Output

Each time the program runs, a .csv file containing the instantaneous values of all four measured quantities will be created. The .csv file will be named corresponding with the current date and time, and will contain the values of the four quantities at all points sampled by the sensor,

Graph Outputs

To generate graphs, the following commands can be used:

- Press and hold t to see the temperature graph
- Press and hold h to see the humidity graph
- Press and hold p to see the pH graph
- Press and hold e to see the electrical conductivity graph

All graph outputs use instantaneous values, and not moving averages, for their respective data points